REVISIONS				
REV	DESCRIPTION	BY	ECO	DATE
G	UPDATED TITLE BLOCK	R. DHONDE	0106104	12/25/2014

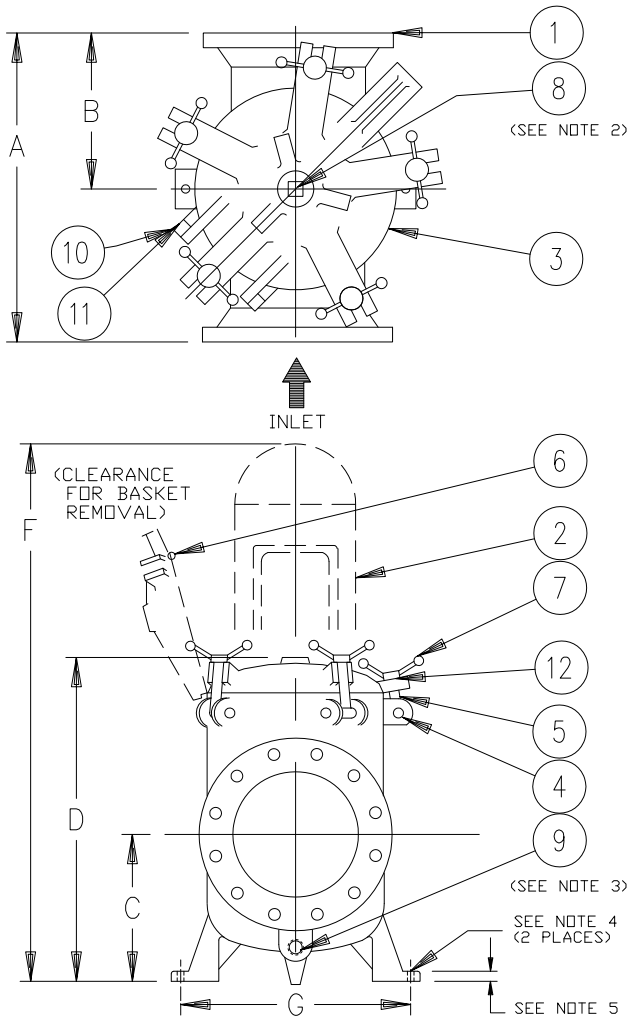

NO.	PART NAME	MATERIAL
1	BODY	DUCTILE IRON ASTM A395
2	BASKET	
	PERF. DIA.	
	MESH	
3	COVER	DUCTILE IRON ASTM A395
4	SWING NUT	CARBON STEEL
5	STUD	STEEL
6	O-RING	BUNA-N
7	HANDLE	CAST IRON
8	VENT PLUG	CARBON STEEL
9	DRAIN PLUG	CARBON STEEL
10	CLEVIS PIN	CARBON STEEL
11	COTTER PIN	STEEL
12	WASHER	STEEL

NOTES:

1. INLET/OUTLET CLASS 150 FLAT FACED FLANGED CONNECTIONS PER ASME B16.42.
2. ITEM 8, VENT - 1/4" NPT (8mm).
3. ITEM 9, DRAIN - 1-1/2" NPT (40mm).
4. MOUNTING HOLE Ø IS 1" (25mm) NOMINAL.
5. MOUNTING PAD THICKNESS 1" (25mm).
6. MAX. WORKING PRESSURE: 200 PSI @ 100° F (13.8 BAR @ 37.8° C)

PIPE SIZE (NOMINAL)	DIMENSIONS						WEIGHT (DRY)		PART NO.
	A	B	C	D	F	G			
	IN. MM.	IN. MM.	IN. MM.	IN. MM.	IN. MM.	IN. MM.	LBS.	KGS.	
10" (250mm)	23.00 / 584	11.00 / 279	12.19 / 310	29.00 / 737	47.00 / 1194	19.00 / 483	420	191	ST073100BF60C
12" (300mm)	27.00 / 686	13.00 / 330	16.75 / 425	38.00 / 965	67.00 / 1702	23.00 / 584	550	250	ST073120BF60C
14" (350mm)	31.00 / 787	15.50 / 394	18.75 / 476	45.00 /1143	77.00 / 1956	27.00 / 686	850	386	ST073140BF60C
16" (400mm)	31.00 / 787	15.50 / 394	18.75 / 476	45.00 /1143	77.00 / 1956	27.00 / 686	975	443	ST073160BF60C
18" (450mm)	31.00 / 787	15.50 / 394	18.75 / 476	45.00 /1143	77.00 / 1956	27.00 / 686	1000	454	ST073180BF60C

CUSTOMER INFO	
NAME	
P.O. NO.	
TAG NO.	
S.O. NO.	
PART NO.	SEE TABLE

DRAWN BY: VAA

SCALE: AS DRAWN

RESTRICTION: RESTRICTED

SHEET: 1 OF 1

PROJECTION: THIRD ANGLE

EATON

HYDRAULICS GROUP
FILTRATION DIVISION
GALESBURG, MICHIGAN, USA • TINTON FALLS, NEW JERSEY, USA

TITLE: MODEL 73 SIMPLEX STRAINER, 150# FLAT FACE FLANGE, SIZES 10" THRU 18" DUCTILE IRON

DATE	SIZE	DWG FILENAME	REV
05/21/92	A	SD073036	G

EATON CORPORATION – CONFIDENTIAL AND PROPRIETARY NOTICE TO PERSONS RECEIVING THIS DRAWING AND/OR TECHNICAL INFORMATION
THIS DOCUMENT, INCLUDING THE DRAWING AND INFORMATION CONTAINED THEREON IS CONFIDENTIAL AND IS THE EXCLUSIVE PROPERTY OF EATON AT ANY TIME. BY TAKING THE POSSESSION OF THIS DOCUMENT THE RECIPIENT ACKNOWLEDGES AND AGREES THAT THIS DOCUMENT CANNOT BE USED IN ANY MANNER ADVERSE TO THE INTEREST OF EATON AND THAT NO PORTION OF THIS DRAWING MAY BE COPIED OR OTHERWISE REPRODUCED WITHOUT THE PRIOR WRITTEN CONSENT OF EATON, IN THE CASE OF CONFLICTING CONTRACTUAL PROVISIONS, THIS NOTICE SHALL GOVERN THE STATUS OF THIS DOCUMENT.
2015 EATON CORPORATION – ALL RIGHTS RESERVED.